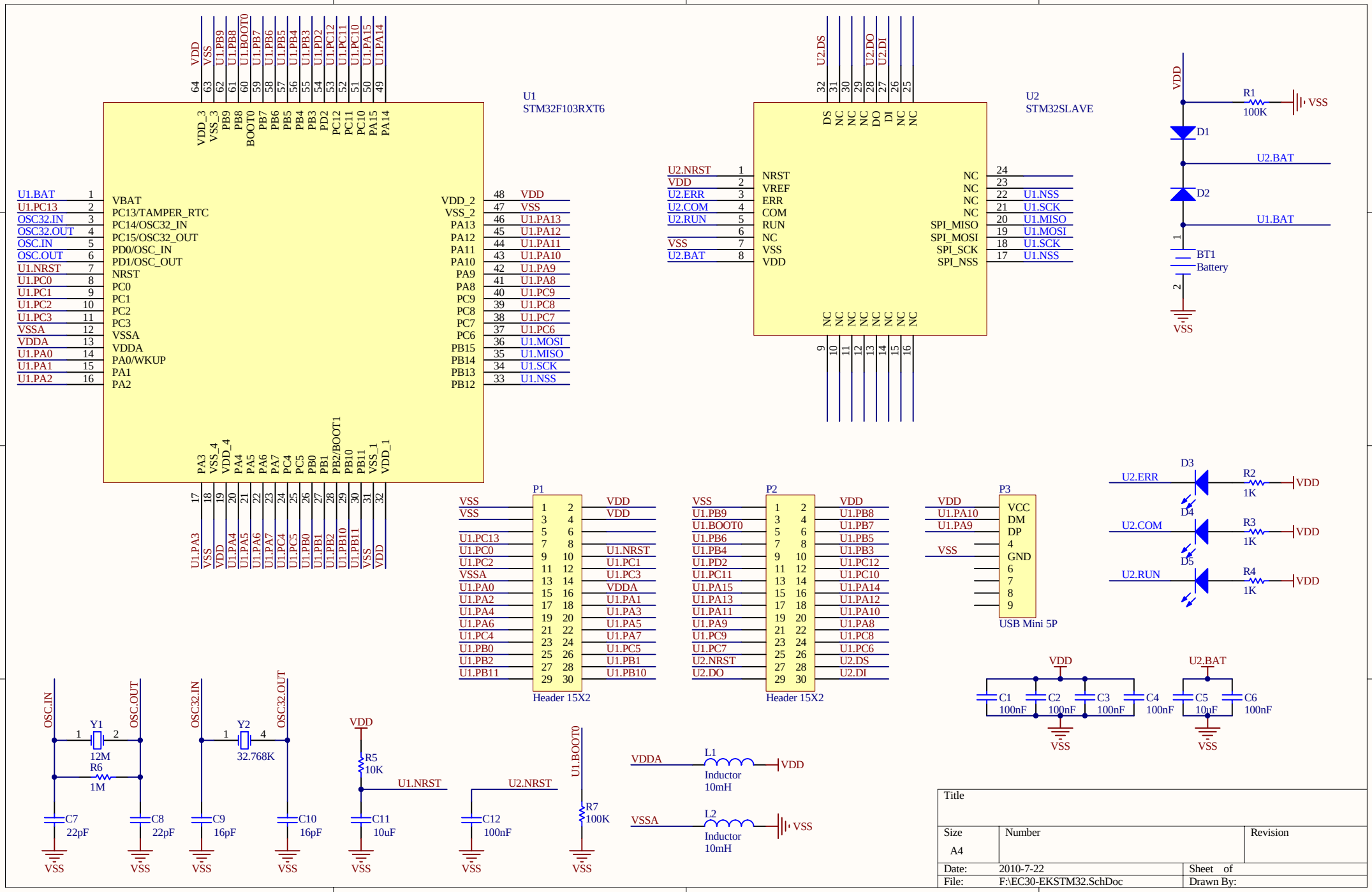
U1
STM32F103RXT6
U2
STM32SLAVE
P1
Header 15X2
P2
Header 15X2
P3
USB Mini 5P
Y1
12M
Y2
32.768K
R6
1M
R5
10K
R7
100K
R1
100K
R2
1K
R3
1K
R4
1K
D1
D2
D3
D4
D5
BT1
Battery
L1
Inductor
10mH
L2
Inductor
10mH
C1
100nF
C2
100nF
C3
100nF
C4
100nF
C5
10uF
C6
100nF
C7
22pF
C8
22pF
C9
16pF
C10
16pF
C11
10uF
C12
100nF
VDD
VSS
U2.BAT
U1.BAT
U1.NRST
U2.NRST
U1.BOOT0
VDDA
VSSA
Title
Size
A4
Number
Revision
Date:
2010-7-22
Sheet of
File:
F:\EC30-EKSTM32.SchDoc
Drawn By: